Dimensions are approximate.

Unit: mm.

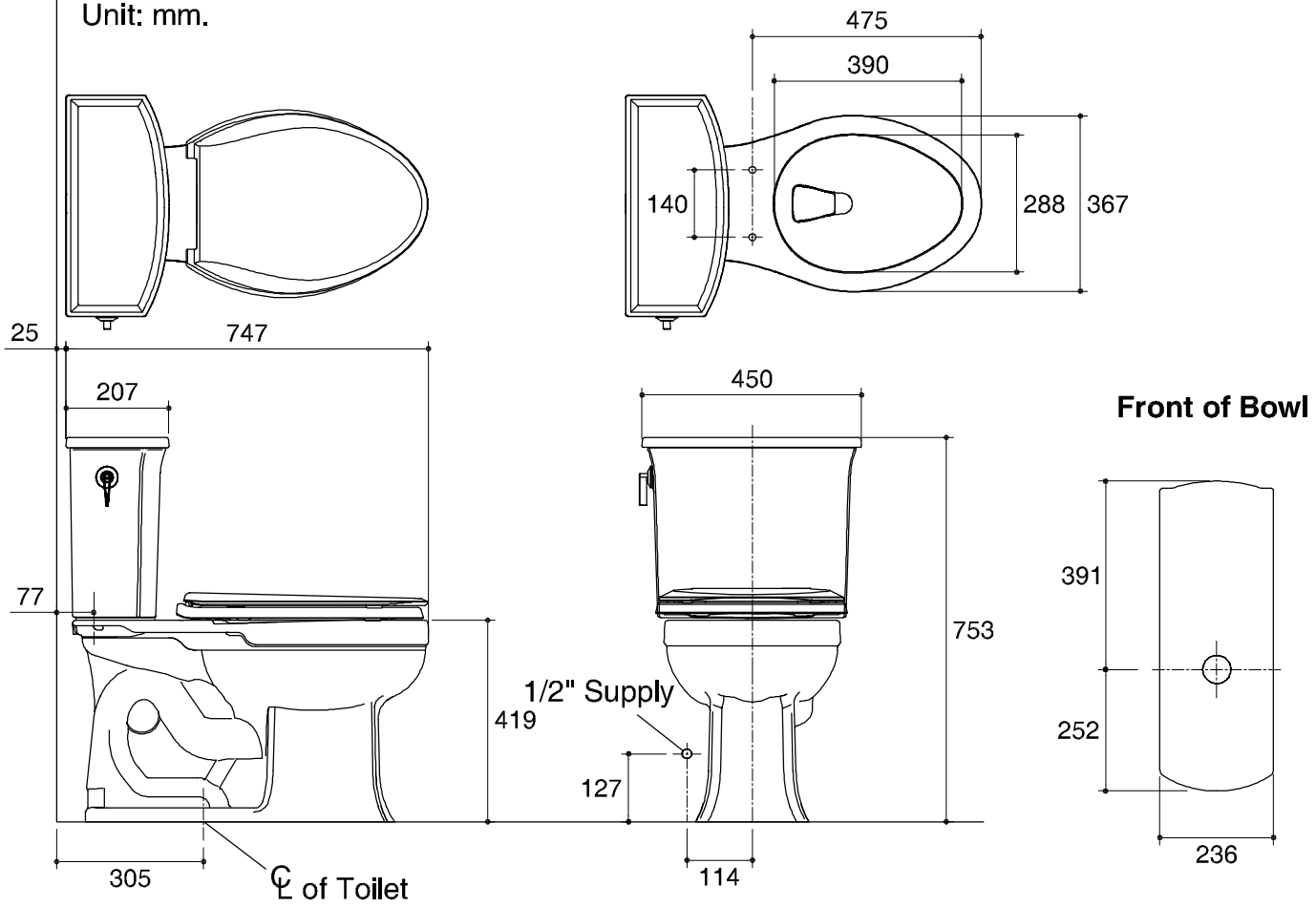

SKU	**K-11477X-S-0**
Name	**ARCHER**
Description	**2PC TOILET**

KOHLER

* The recommended dimension for installation can be adjusted according to user preferences and layout.