Dimensions are approximate.

Unit: mm

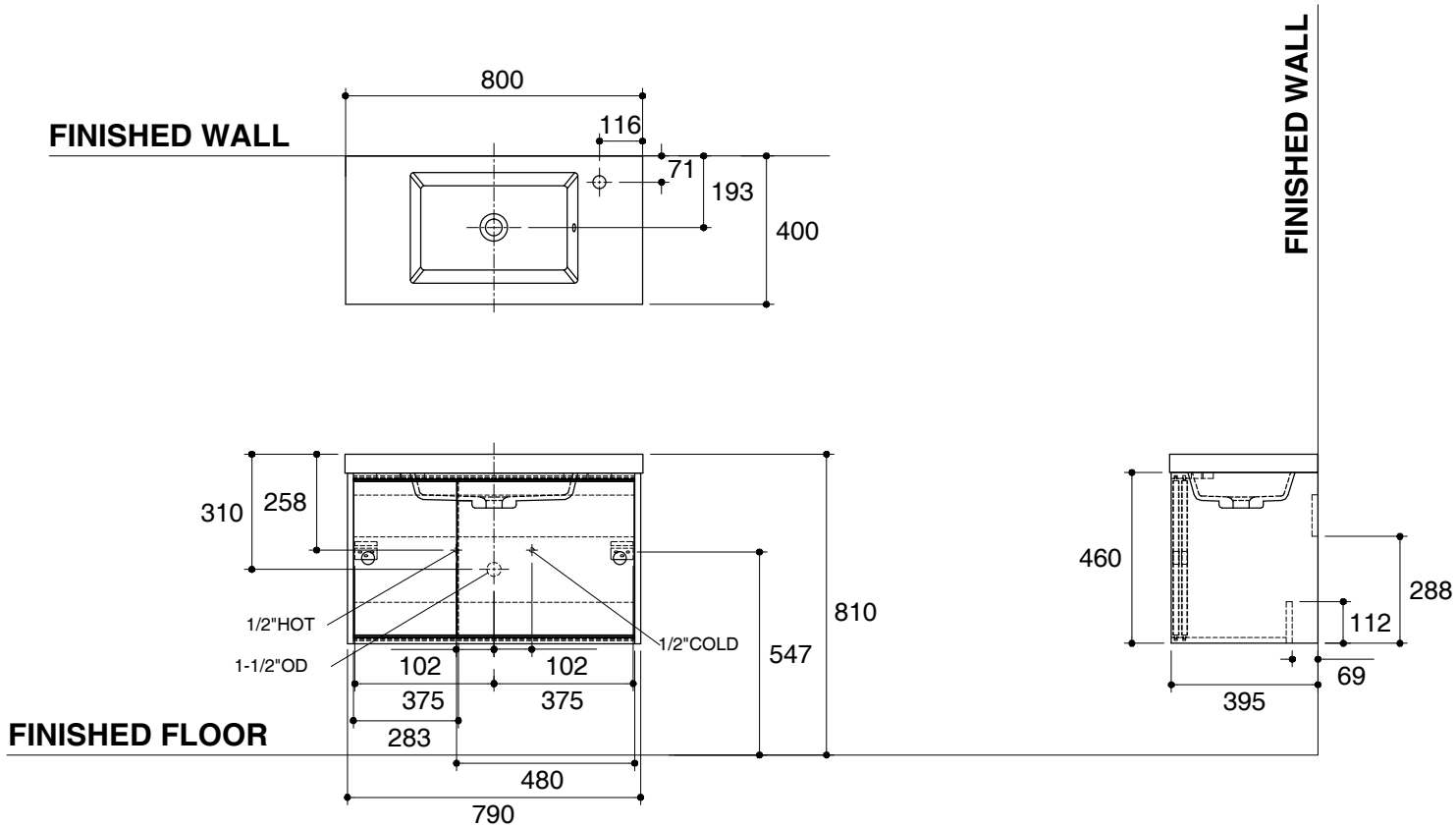

SKU	**K-15227X-GZ**
Name	**SLIM**
Description	**800 MM.BASIN CABINET**

KOHLER

*The recommended dimension for installation can be adjusted according to user preferences and layout.