Dimensions are approximate.

Unit: mm

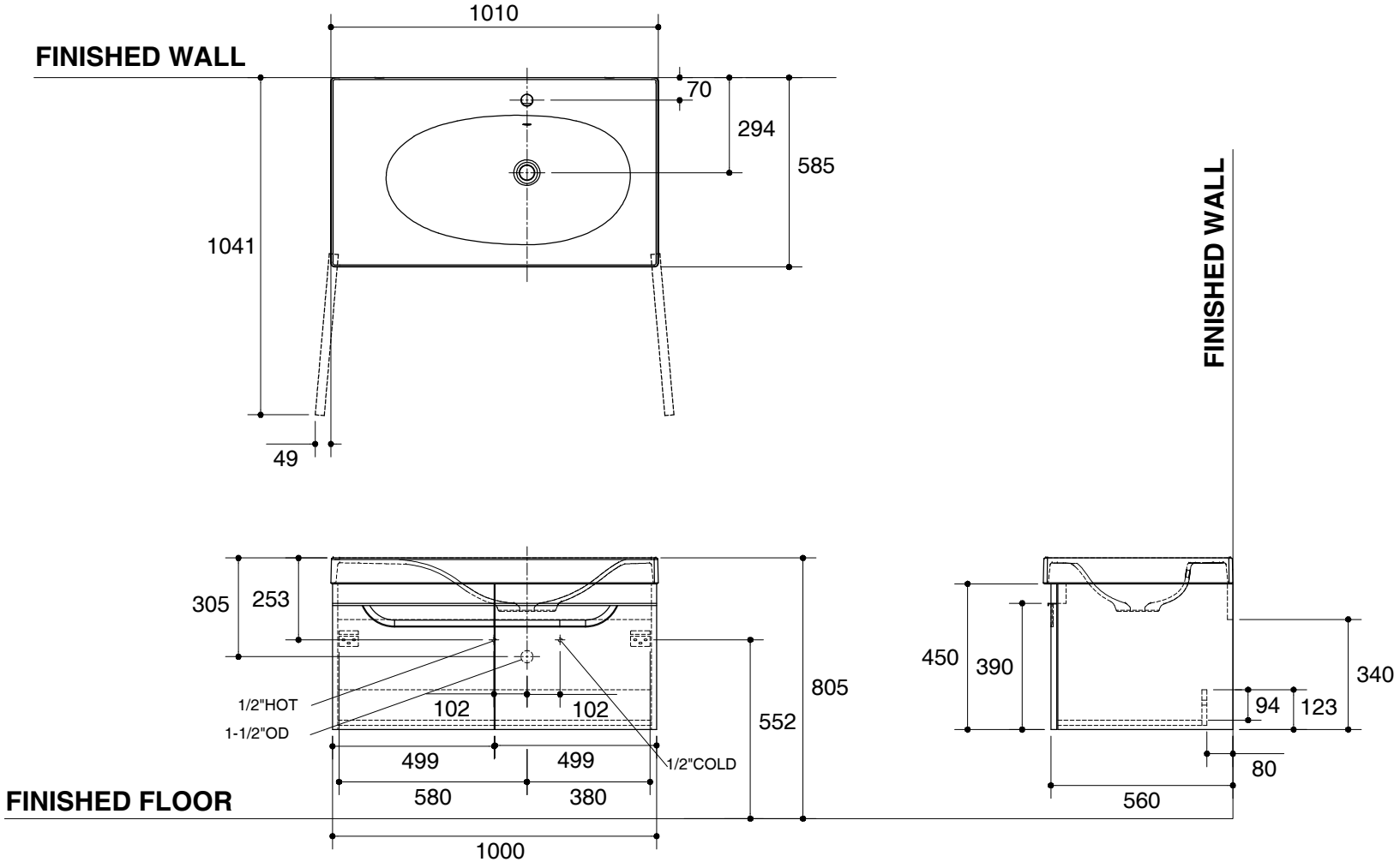

SKU	**K-15051T-LU**
Name	**PARADOX**
Description	**1000 MM. BASIN CABINET**

KOHLER

*The recommended dimension for installation can be adjusted according to user preferences and layout.