Dimensions are approximate.

Unit: mm

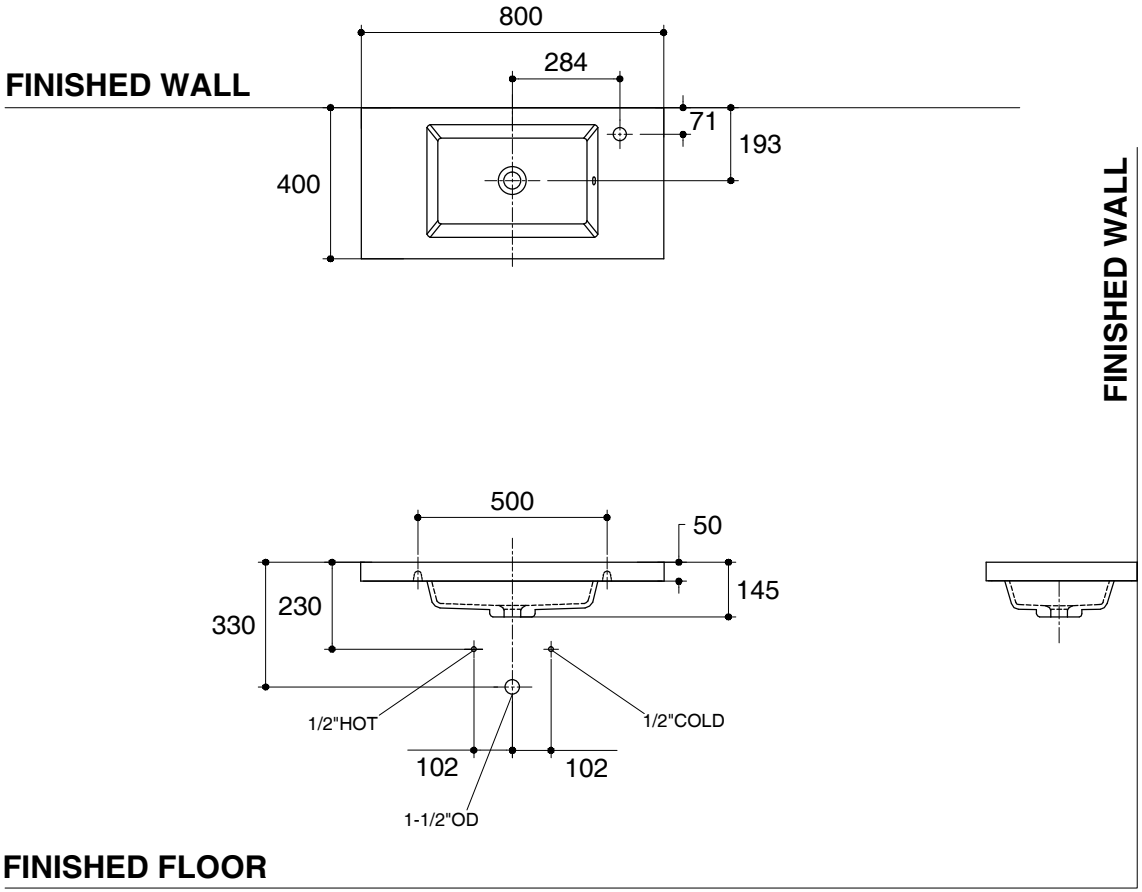

SKU	**K-15229X-AR-0**
Name	**SLIM**
Description	**800 MM. SYNTHETIC VANITY TOP**

KOHLER

*The recommended dimension for installation can be adjusted according to user preferences and layout.