Dimensions are approximate.

Unit: mm

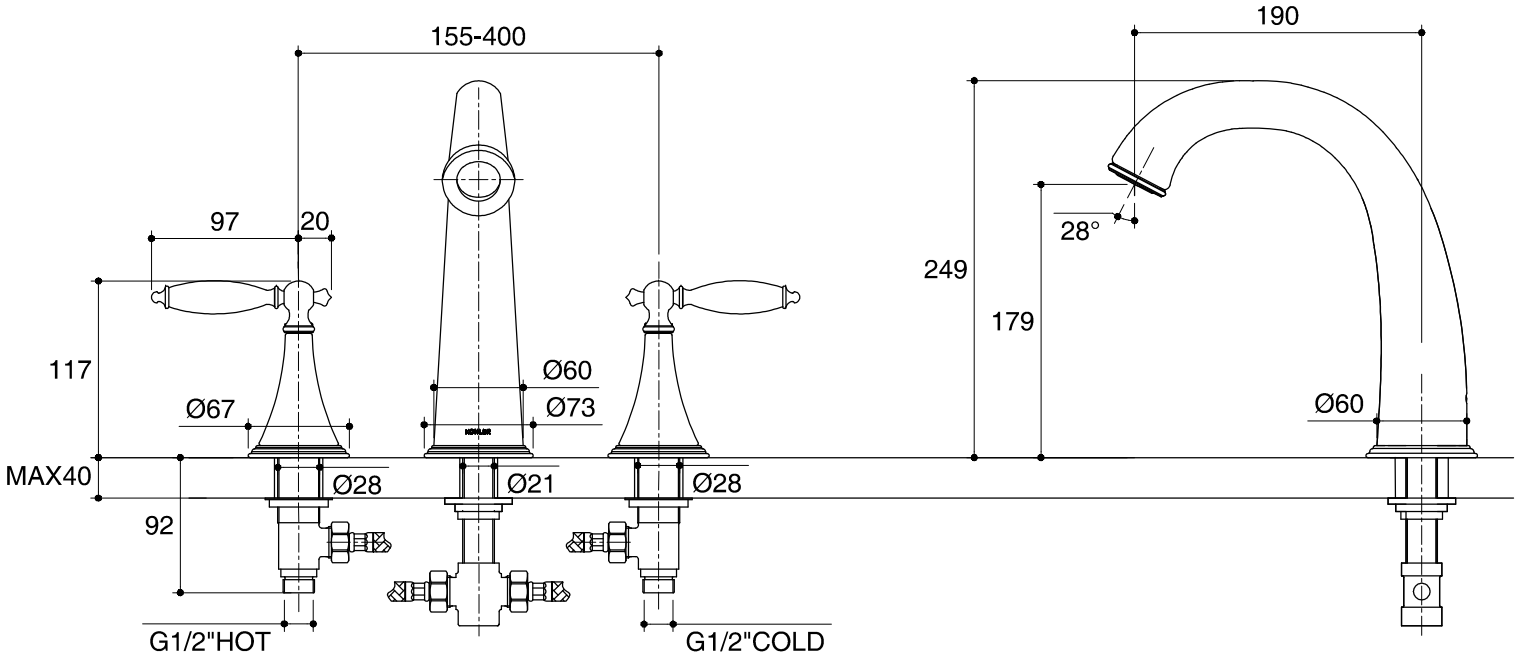

SKU	**K-8673X-4P-CP**
Name	**FINIAL**
Description	**DECK-MOUNT BATH SHOWER**

KOHLER

*The recommended dimension for installation can be adjusted according to user preferences and layout.