Dimensions are approximate.

Unit: mm

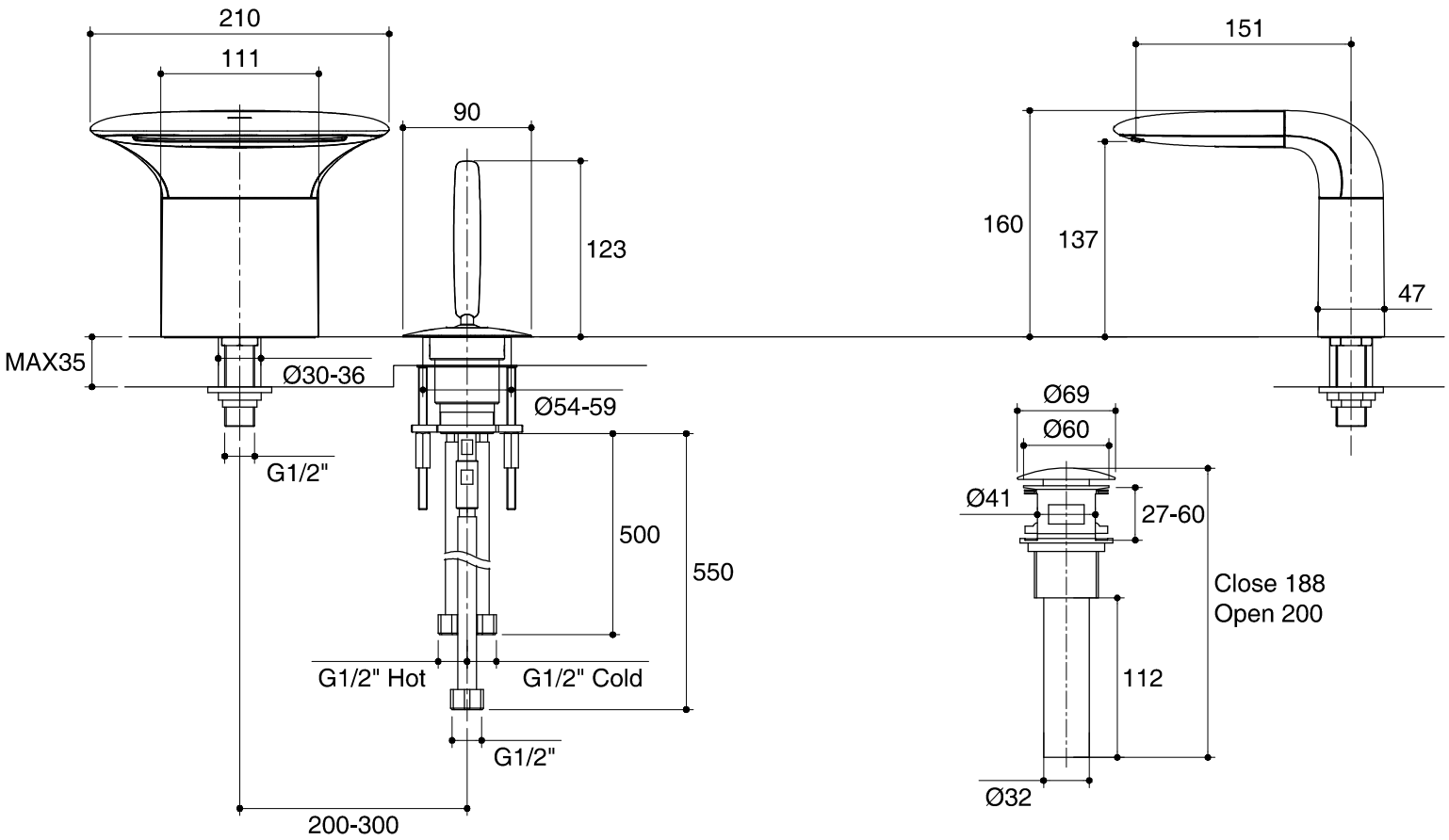

SKU	**K-37263X-4-CP**
Name	**AIRFOIL**
Description	**SINGLE CONTROL LAVATORY FAUCET**
	KOHLER

*The recommended dimension for installation can be adjusted according to user preferences and layout.