Dimensions are approximate.

Unit: mm

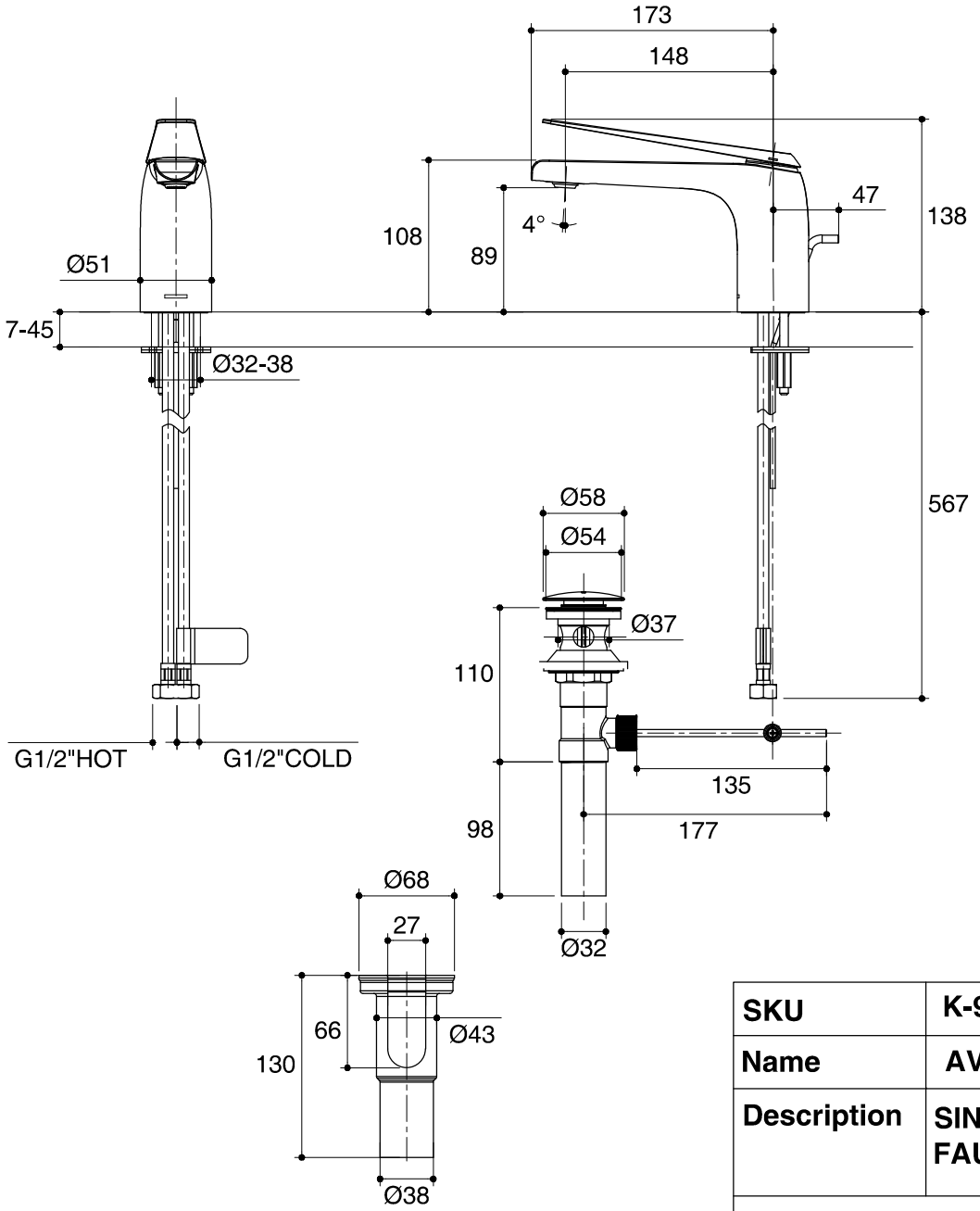

SKU	**K-97345T-4-CP**
Name	**AVID**
Description	**SINGLE HANDLE LAVATORY FAUCET**

KOHLER

*The recommended dimension for installation can be adjusted according to user preferences and layout.