Dimensions are approximate.

Unit: mm

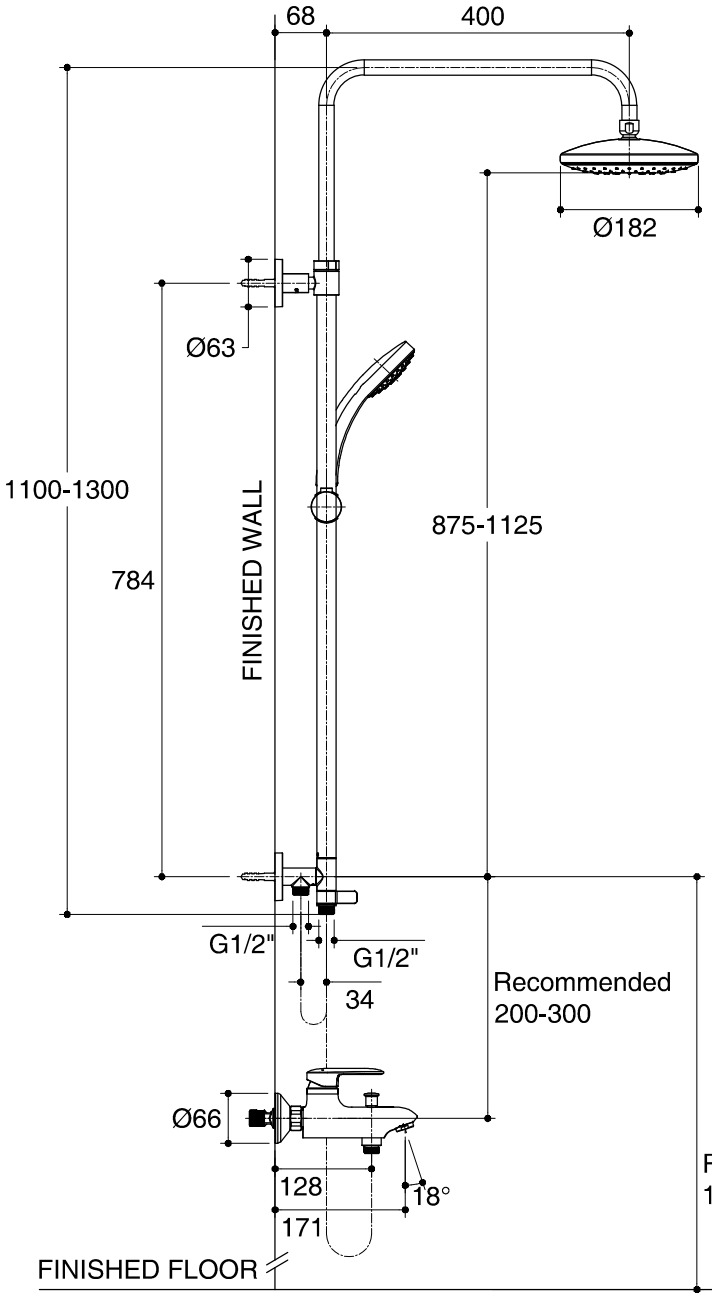

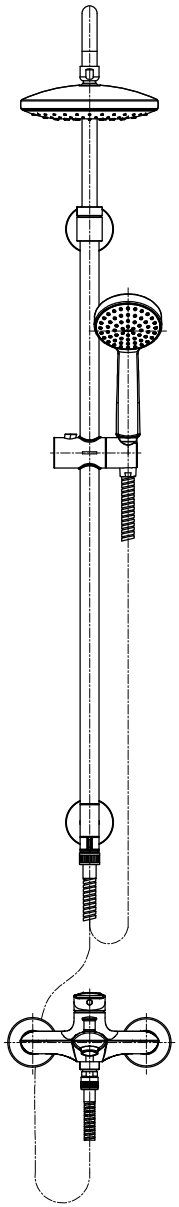

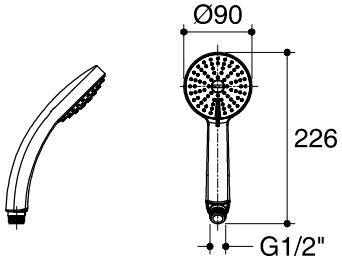

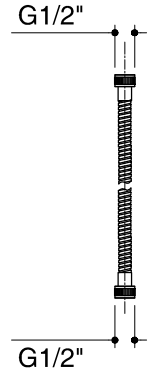

Supply hose

500 mm.

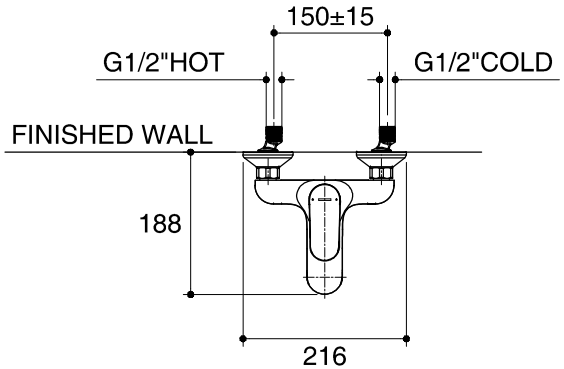

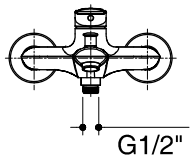

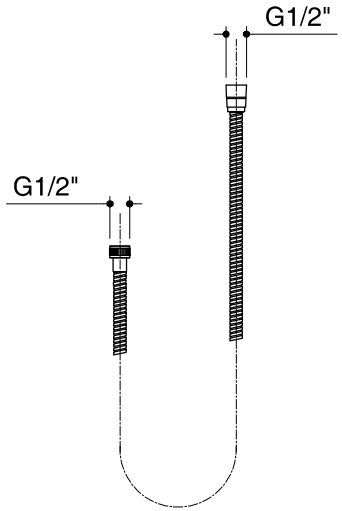

Hose 1.5m

SKU	**K-99474T-4-CP**
Name	**KUMIN**
Description	**SHOWER COLUMN**

KOHLER

*The recommended dimension for installation can be adjusted according to user preferences and layout.