Dimensions are approximate.

Unit: mm

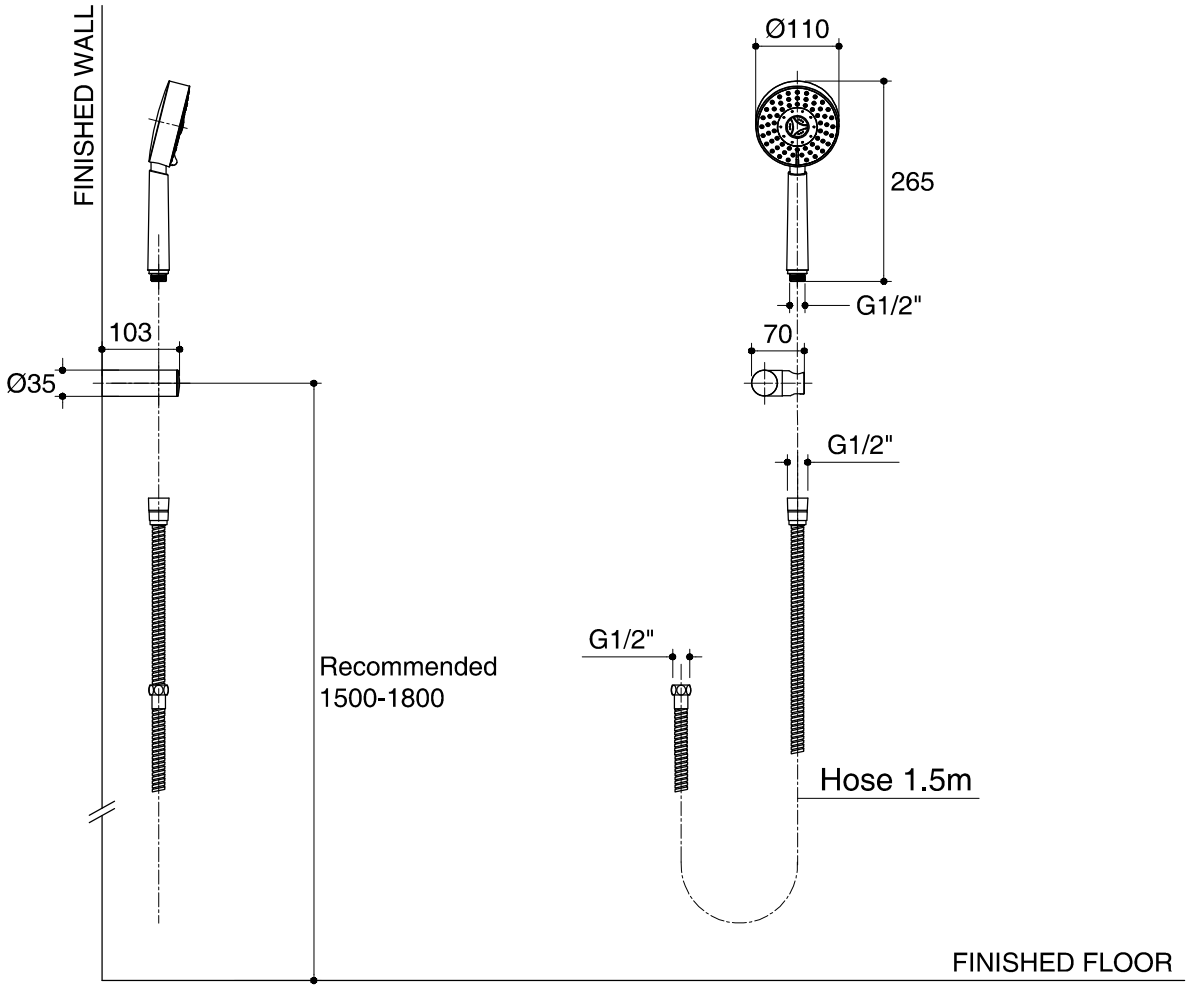

SKU	**K-7656X-CP**
Name	**CHUVA**
Description	**HANDSHOWER SET**

ENGLEFIELD

*The recommended dimension for installation can be adjusted according to user preferences and layout.